AR-8X
RELAY INTERFACE

TECHNICAL REFERENCE

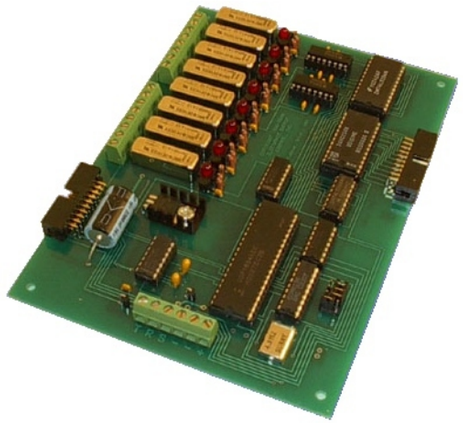

Click for more info: www.eeci.com/ar-8p.htm

PHONE..... (937) 349-6000
ORDERS..... (800) 842-7714
TECH SUPPORT... (937) 349-6000
E-mail..... sales@eeci.com

www.eeci.com
Click for Website

TABLE OF CONTENTS

Specifications, Technical Support and Warranty..... page 1
Connection Diagram..... page 2
Power Supply Requirements..... page 2 & 9
Set-Up, Testing & Trouble-Shooting..... page 3 & 4
Connector Pin-Outs..... page 4 & 5
Commercial Use of the AR-8..... page 6
Relay Start-Up Status..... page 6
Baud Rate & Protocol Selection..... page 8 & 9
Power Supply Voltage Regulation..... page 9
Expanding Relay Outputs..... page 9 & 10
RS-422/RS-423 & RS-485 Interfacing..... page 10 & 11
Rack Mounting & Control Software..... page 11
Programming Examples..... page 11, 12 & 13
Connection to Existing Relays..... page 14
RD-8, RH-8 and RCT-8 Cards..... page 15
RYD-8 Relay Driver & Repair Service..... page 16 & 17

SPECIFICATIONS

Power Supply.....	9 to 14 volts DC (400MA)
Serial Data Protocol.....	50 to 19,200 baud (defaults to 8 data bits, no parity 2 stop bits)
Relays.....	8 relays, contacts rated at 10VA up to 125 volts AC or DC ½ amp maximum (under 20 volts)
Expansion Capability.....	up to 120 relays (using (7) EX-16 or (3) EX-32 expansion cards) and up to 128 digital inputs or up to 32 analog inputs
Software Compatibility.....	All Windows operating systems, DOS and most other operating systems.
Hardware Compatibility.....	Typically this will be all computers that support serial communications, from the slowest 8086 to the fastest Quad core and newer.
Weight.....	10 ounces
Size.....	7 inches by 5 inches
Options Available.....	TransZorb, RS-422, RS-423 & RS-485

TECHNICAL SUPPORT

Technical support for our products is available by calling (937) 349-6000. If a technical adviser is not available, please leave your name, phone number and a time that you can be reached. Your call will be returned as soon as possible and within 24 hours.

WARRANTY AND CARE OF THE AR-8X

The AR-8X Relay Interface is warranted against factory defects for a period of 90 days from the date of purchase. The AR-8X has proven to be extremely reliable in actual operation during field tests. We recommend that the AR-8X and associated hardware be installed in a suitable enclosure (4 mounting holes are provided on the circuit board) and that reasonable precautions be taken to protect the circuit from static discharge. The most likely damage to occur is that caused by lightning discharge through the power supply or relay output lines. The best way to prevent this type of damage is to order the AR-8X with the /T TransZorb option and install a Power Protector (Part # SP-120) in the electrical outlet which supplies power to the hardware. Installing opto-isolators on the AR-8X will further reduce the possibility of damage caused by lightning.

CONNECTION DIAGRAM

AR-8X RELAY INTERFACE

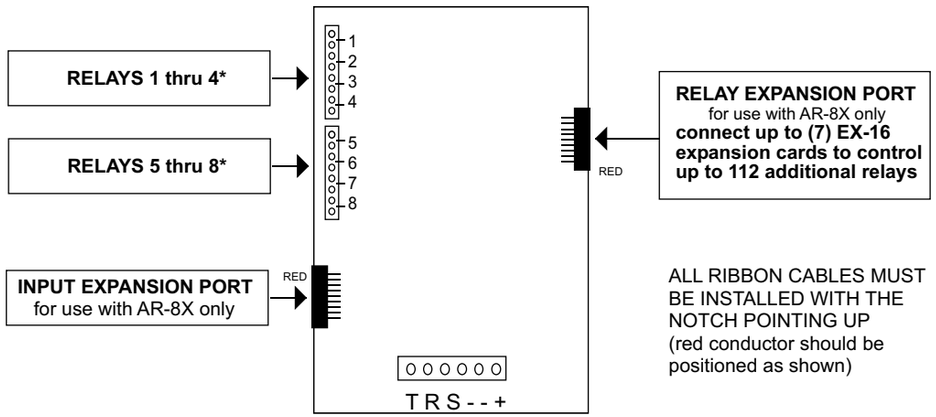

* relay contacts are rated 10 VA up to 125 volts AC or DC
½ amp maximum at 20 volts or less.

AR-8 TERMINAL BLOCK CONNECTIONS

(T)	Transmitter (used only with AR-8X input expansion) green wire
(R)	Receiver (RS-232 connect to white wire) (RS-422 = receiver (-))
(S)	(+) 12 volt control signal for use with RS-232 (connect to black wire)
(-)	RS-232 signal ground (connect to red wire)
(-)	Power supply (black wire) (use caution, reversed polarity may
(+)	Power supply (red wire) cause damage, 9 to 14 volts DC only)

POWER SUPPLY REQUIREMENTS

The AR-8X may be powered from any DC voltage source which will supply 300 ma within a voltage range of 9 to 14 volts. The recommend power supply for use with a single AR-8X card is the PS-GP-1 (wall transformer supply). IMPORTANT: Use caution when connecting the power source, reversed polarity may cause damage. The heat dissipation of the 7805 regulator on the AR-8X will be greatly reduced with a 9 volt power source. The PS-9VDC-500 and PS-9VDC-1000 wall transformer power supplies may be used to power both the AR-8 and relay card(s). The PS-12VDC-500 and PS-12VDC-1000 are unregulated supplies and may produce voltages as high as 18 volts. A 7812 regulator should be used with these supplies to regulate voltage to the hardware (as shown on page 9).

POWER SUPPLY FUSING: A 500 milliamp (.5 amp) in-line fuse should be installed in series with the (+) power supply lead to protect the power supply and the AR-8X from damage. The AR-8X may be ordered with the /T option which will provide power fusing.

SET-UP AND TESTING

Upon receiving your AR-8X, you should connect and test the operation of the hardware to verify proper operation. Please set-up and test the AR-8X as follows:

(1) Plug the serial cable into COM 1 of your computer and connect the other end to the terminal block on the AR-8X (as shown on page 2). If you did not order a serial cable, a cable may be fabricated by soldering the wires to the proper connector as shown on the following pages. Care should be taken to prevent any static discharge on the AR-8X by touching a metal ground before handling the AR-8X and associated circuits. Use caution not to set the AR-8X on a metal surface or damage could result.

(2) Connect the power supply to the AR-8X. Be sure to observe the (+) and (-) connections on the AR-8X (reversed polarity may cause damage). .

(3) The AR-8X is set to 9,600 baud at the factory. This is the proper setting for use with the test software which is provided on CD with your order. If your operating system is Windows 95, 98, ME, 2000 or early version XP), you must install the Universal App at the installation CD startup window (or double click setup.exe in the folder Windows Test Program). If prompted about an older file, keep your newer file.

If your operating system is Windows XP (service pack 3), Vista, Windows 7 or Windows 8, you may install the Microsoft .Net App at the installation CD startup window (or double click setup.exe in the Windows Test Program/DotNet folder. If any .Net components are missing, the installation program will attempt a download from Microsoft Windows Update. If you do not have an Internet connection, you must use the Universal App.

Once installed, run the AR-8X test program. The program defaults to Com 1. Other Com ports may be selected if required. You may set the relays to sequence on by selecting "8" in the Sequence frame.

The relays should sequence on starting with relay #1 at about 1 second intervals. After all 8 relays have energized, the relays will de-energize and sequence on in reverse order starting with relay #8. Verify that each relay energizes one at a time and in the correct sequence (the relay # should correspond with the relay # shown on the screen).

(4) If operation of the relays is normal, than testing is now complete and the AR-8X may be placed in service. If the relays do not energize or if operation of the relays is erratic, proceed to the next section.

NOTE 1: When you develop your software, the first action taken should be to reset all the relays to a predetermined state.

NOTE 2: The (S) terminal on the AR-8X is provided for use as an RS-232 control signal for use with the RS-232 control lines CTS, DSR or DCD. The (S) terminal may be used to supply a signal to one of the RS-232 control lines for use as a supervisory signal to sound an alarm with your software when the AR-8X has lost power or has been disconnected. The black wire on your serial cable is by default connected to DCD.

TROUBLE-SHOOTING THE AR-8X

(1) Verify power to the AR-8X by checking for 5 volts DC on the 2200 mf capacitor (low voltage may indicate an overload). Verify power to the relay card by checking for 12 volts DC at the power input terminals on the relay card (see page 15). Verify that the AR-8X is set to the same baud rate as what appears on the test software screen.

(2) Check the Com Port used with the AR-8X. Open device manager by clicking on the "Open Device Manager" button on your installation CD (or by going to control panel). Click the small triangle (or +) to the left of Ports to expand the Ports category, right click on the Com port that you have the AR-8X connected to and click properties. Check the Com port status and verify that you have the test program set to this Com port and verify that you have the AR-8X connected to this Com port.

NOTE 3: With some programming languages the semicolon (;) at the end of the command is used to suppress the carriage return and line feed. A line feed will transmit a "10" and will de-energize relay #6. A carriage return will transmit a "13" and will energize relay #7.

(3) If erratic operation of the relays is experienced, check for loose connections at the ribbon cable. Check for power supply interruptions or short circuits caused by metal contact to the AR-8X or relay card circuit areas. Check for bent or shorted contacts on the relay card ribbon connectors and the RC-20 or RCT-8 ribbon connectors (if used). When more than three EX-16 cards are connected to the AR-8X, an external power feed is required (see EX-16 manual).

(4) If you are connecting the AR-8X to a USB port, the Com port entry must be "Prolific USB to Serial Comm Port". Right click on this entry, click properties and open the Driver tab. Your USB Com driver must be Prolific version 3.4.62.293 or higher (dated 10/17/2013 or later). If your USB Com driver is not up to date, then right click the "Prolific USB to Serial Comm Port" entry and click update driver. If you do not see a "Prolific USB to Serial Comm Port" entry then the USB cable driver is not correctly installed. You may re-install the driver from the supplied CD or Windows Update. You may verify that you have the AR-8X connected to this "Prolific USB to Serial Comm Port" entry by watching the entry and unplugging the AR-8X USB cable from your computer. The entry should disappear and then re-appear when you re-connect the USB cable to the AR-8X.

Please contact EECI Support at (800) 842-7714 or (937) 349-6000 if you require additional assistance or have questions.

CONNECTOR PIN-OUTS

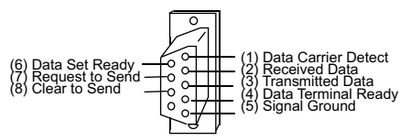

DB-9 CONNECTOR...SOCKET (female)
(rear view/solder side)

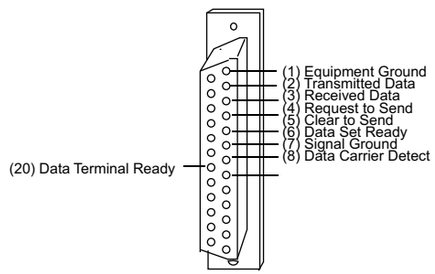

DB-25 CONNECTOR...SOCKET (female)
(rear view/solder side)

DB-9 Pins Connection

(1) Data Carrier Detect* (connect to black wire or terminal (S) on the AR-8X)
NOTE: This connection is not needed on most computers.

(3) Transmitted Data (connect to white wire or terminal (R) on the AR-8X)

(5) Signal Ground (connect to red wire or terminal (-) on the AR-8X)

DB-25 Pins Connection

(2) Transmitted Data (connect to white wire or terminal (R) on the AR-8X)

(7) Signal Ground (connect to red wire or terminal (-) on the AR-8X)

(8) Data Carrier Detect* (connect to black wire or terminal (S) on the AR-8X)
NOTE: This connection is not needed on most computers.

DB-9 CONNECTOR (continued)

The following pins are optional and may be used as needed for specific applications.

(4) Data Terminal Ready (DTR)-output from your PC.

(6) Data Set Ready (DSR)-input to your PC.

(7) Request To Send (RTS)-output from your PC.

(8) Clear To Send (CTS)-input to your PC.

DB-25 CONNECTOR (continued)

The following pins are optional and may be used as needed for specific applications.

(4) Request to Send (RTS)-output from your PC.

(5) Clear to Send (CTS)-input to your PC.

(6) Data Set Ready (DSR)-input to your PC.

(20) Data Terminal Ready (DTR)-output from your PC.

* On some types of computers, the Data Carrier Detect must be held high (+12 volts) before the RS-232 port is enabled. The (S) terminal on the AR-16 will provide the +12 volts.

ADDITIONAL CONNECTOR PIN-OUTS

4 PIN DIN (Tandy) | 5 PIN DIN (Apple) | 8 PIN MINI-DIN (Mac & IBM) | RS-422 (DB-9 plug)

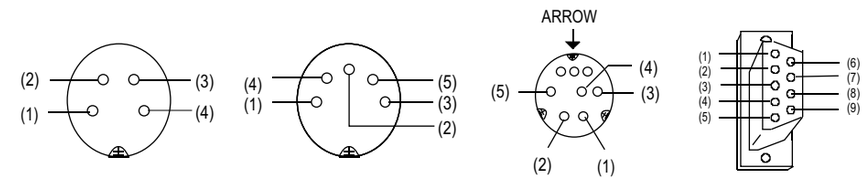

Pin #	Connection	Pin #	Connection	Pin #	Connection	Pin #	Connection
(1)	not used	(1)	DTR	(1)	DTR	(2)	Transmitter (+)
(2)	Busy (DSR)	(2)	Signal Ground	(2)	DSR, DCD & CTS	(3)	Equipment Ground
(3)	Signal Ground	(3)	DSR	(3)	Transmitted Data	(4)	Receiver (+)
(4)	Transmitted Data	(4)	Transmitted Data	(4)	Signal Ground	(7)	Transmitter (-)
		(5)	Received Data	(5)	Received Data	(8)	Receiver (-)

NOTE: The above connector illustrations are viewed from the rear (solder side).

CONNECTION OF THE AR-8 DIRECTLY TO A MODEM

The AR-8 may be connected directly to a modem at a remote location without the need for a PC at the remote site. The modem at the remote site is then considered DCE equipment (Data Communications Equipment) and requires that the serial transmitter and receiver lines be reversed (pins 2 & 3 on a DB-25 and DB-9) when connecting to the AR-8. When the AR-8 is connected directly to a computer, the computer is considered to be DTE equipment (Data Terminal Equipment) and the pin-outs shown on the preceding page are correct.

COMMERCIAL USE OF THE AR-8

When the AR-8 is to be used in a commercial/industrial environment, additional action must be taken to insure long term reliability and trouble free operation of the hardware. In general, the most serious threat to the hardware will be electrical transients (most often caused by electrical storm activity). The following steps are strongly encouraged to protect the hardware and are listed in the order of highest priority:

(1) Install a voltage surge/spike protector in the 120 volt AC outlet which supplies power to the AR-8 and to your hardware. Be sure that the electrical outlet has a third prong electrical ground and that it is correctly wired. TransZorbs may also be installed on the RS-232 input lines to the AR-16 (specify part # SP-232K).

(2) Install the AR-8 (and any expansion cards) in a metal enclosure and ground the enclosure to a reliable earth ground (an electrical system ground using the third prong on an electrical outlet will usually be sufficient). Install a TransZorb across the power input to the AR-8 (at the terminal block) and connect a TransZorb from the (-) terminal to the metal enclosure. An in-line ½ amp fast-acting fuse should be installed prior to the TransZorbs (the fuse will blow and help prevent damage to the AR-8 in the event of a major electrical surge). When the installation site is at higher elevations, in areas that are subject to increased electrical storm activity, the installation of lightning arresters, gas-tube discharge devices and other action may be necessary (contact technical support for more information).

(3) Order the AR-8, EX-16 & EX-32 with the /C Opto Isolator option. The opto isolators significantly reduce the possibility of voltage transients back-feeding to the AR-16 through the relay output lines.

(4) Power the AR-8 from a 9 volt regulated DC power supply. The regulation will provide additional protection from voltage transients. A 9 volt power source will significantly reduce the heat produced by the AR-8 and will also reduce the energy consumption of the AR-16. If the AR-8 is to be operated in elevated room temperatures (above 85° F), additional steps should be taken to reduce heating of the AR-8. Install a larger heat sink on the AR-16 regulator and install the AR-8 in a larger metal enclosure.

REMOTE CONNECTION OF RELAY CARDS

Relay cards may be located up to several miles away from the AR-8X (provided that opto isolators are installed on the EX-16). The relay card may then be connected to the EX-16 using low cost 24 gauge communication cable (or other types of cable). The RCT-16 terminal blocks or RCP-8 (DB-9 connector) ribbon cable adapters should be used at the EX-16 for connection to the interconnect cable (see illustration on page 17). The ribbon cable edge connector on the relay card should be cut off and replaced with a header socket for connection to the RRT-8 or RRT-16 terminal blocks to allow for connection to the interconnect cable. The relay card edge connector may be replaced with a DB-9 connector in place of the header for direct connection to the interconnect cable. All relay cards are available with header sockets or DB-9 connectors installed in place of the edge connector (specify when ordering).

START-UP RELAY STATUS

When the AR-8 is first powered, the relays which are connected will normally power-up in a de-energised state. It is possible under certain conditions (such as fluctuating power) that the relays may power-up in a random state (several relays may energize, while others may not). This is a characteristic of the RAM memory devices used on the AR-8, EX-16 & EX-32. Your program should reset all the relays to a known state when the program is first started.

USING OPTO-ISOLATORS TO ISOLATE RELAY CONTROL LINES

Opto-isolators (or opto-couplers) are generally used to protect the AR-16 (or possibly the RS-232 port) from damage which could be caused by noise or voltages which may feed back to the AR-16. The IC's which provide the relay output signal are of the CMOS variety and are sensitive to static discharge, high noise levels and voltage spikes. Shown below are applications which require the use of opto-isolators:

(1) Applications where the relay card(s) are located more than 3 feet from the AR-16.

(2) When TRIACS or SCR's are used in place of relays. (triacs are generally used for lighting applications or lighting control systems).

(3) Applications which require a common collector output (positive ground). Opto-isolators are configured for common collector unless specified otherwise. Contact us for information on common emitter (negative ground) configurations.

(4) Applications which require an isolated power supply for the control relays/devices.

(5) Applications in which the relay card(s) or output devices are installed in an environment which could generate strong RF, electrostatic or other types of interference.

(6) When the device(s) to be connected directly to the AR-16 are capable of generating a significant induced EMF caused by coil inductance or other means.

INSTALLING OPTO-ISOLATORS

The AR-16, EX-16 or EX-32 may be ordered with the opto-isolators installed by specifying the /C Option or an opto-isolator kit may be ordered for field installations. Install the opto-isolators as follows:

NOTE 6: The opto-isolators will require a positive power feed from the isolated circuit or device which is to be used (opto-isolators with common emitter will require a negative power feed to pin #9). Connect the positive power feed to pin #9 on the 10 conductor ribbon connector which attaches to the AR-16 (or terminal #9 on the RCT-8).

SYSTEMS LEVEL PROGRAMMING CONSIDERATIONS

In Basic and other high level programming languages, the Line Status Register is automatically checked for incoming and outgoing bytes and handles the data flow as needed. When reading or writing to the COM port registers directly (such as in Assembly, C or using the OUT command in Basic), it will be necessary to check the Line Status Register before reading or writing the incoming or outgoing byte. NOTE: The AR-16 does not transmit (disregard bit 0).

BEFORE TRANSMITTING.... check BIT 5 of the Line Status Register before sending byte (bit must be high)

BEFORE RECEIVING.... check BIT 0 of the Line Status Register before accepting byte (bit must be high)

I/O PORT REGISTER LOCATIONS FOR THE LINE STATUS REGISTER

COM 1	COM 2	COM 3	COM 4	
3FD	2FD	3ED	2ED	(hex values)

RELAY RESPONSE SPEED

The speed at which the relays respond to a software command is directly related the baud rate setting of the AR-16 (control software must be set to match the baud rate set on the AR-16 selector shunts). The higher the baud rate setting, the faster a relay (or group of relays) will respond to software transmissions. The default setting of 9,600 baud is mid range (to allow for transmission over a modem, etc.). You may wish to increase the baud rate setting to 19,200 baud if the AR-16 is connected directly to a PC. The 19,200 baud setting will allow your software to energize and de-energize groups of relays almost instantly.

BAUD RATE SELECTION FOR THE AR-8 AND AR-8X

Select the desired baud rate by placing the removable shunts in the positions which correspond to the desired baud rate. All four of the shunts must be in place for the AR-8 to operate properly.

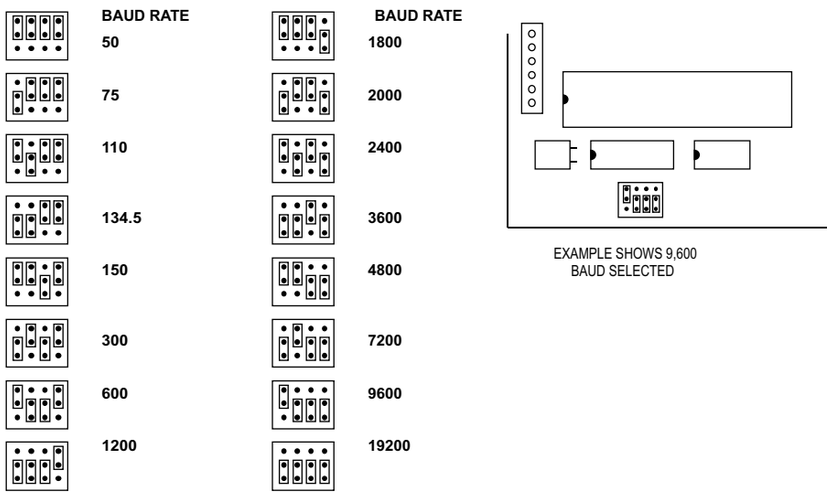

CHANGING PROTOCOL SETTINGS

PARITY, WORD LENGTH and STOP BITS: These functions are selected using pins 35, 36, 37, 38 and 39 on the 40 pin UART IC on the AR-16. Connect the pins to the (-/ground) or (+) 5 volt power feed (located above and below pins 35 thru 39) as shown below and on the following page, to select the desired protocol. Be sure to cut the existing circuit track using a knife (if different). All pins must be connected to (+) 5 volts or ground. DO NOT FLOAT CONTROL PINS.

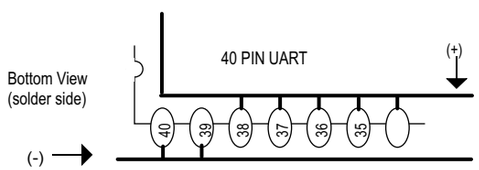

PIN 39 (EPE)	WLS1	WLS2	SBS (PINS 38, 37, 36)	PIN 35 (PI)
0 = Odd Parity	0	0	0 (5 data bits, 1 stop bit)	0 = Parity On
1 = Even parity	0	0	1 (5 data bits, 1.5 stop bits)	1 = Parity Off
	1	0	0 (6 data bits, 1 stop bit)	
	1	0	1 (6 data bits, 2 stop bits)	
	0	1	0 (7 data bits, 1 stop bit)	
	0	1	1 (7 data bits, 2 stop bits)	NOTE: 1=(+5 VDC), 0=(GROUND)
	1	1	0 (8 data bits, 1 stop bit)	
	1	1	1 (8 data bits, 2 stop bits)	

USE OF UNREGULATED WALL TRANSFORMERS

The PS-12VDC-1000 and PS-12VDC-500 power supplies are unregulated and may produce voltages substantially higher (18 volts or more) then the 12 volts DC that is labeled on the device. The AR-8 must not be operated at a voltage higher than 14 volts. The 7812 regulator (supplied with the power supply) may be used to regulate voltage to the AR-8 and relay card(s). Connect the 7812 regulator as shown below:

BLACK WIRE: connect to the (-) terminal on the AR-8 and to the (-) wire coming from the power supply.

RED WIRE: connect to the (+) terminal on the AR-8.

YELLOW WIRE: connect to the (+) wire coming from the power supply.

USE CAUTION: The metal tab on the regulator is electrically connected to the (-) wire (black). Before connecting the red & black wires to the AR-8, check for 12 volts DC across the wires (red should equal (+)).

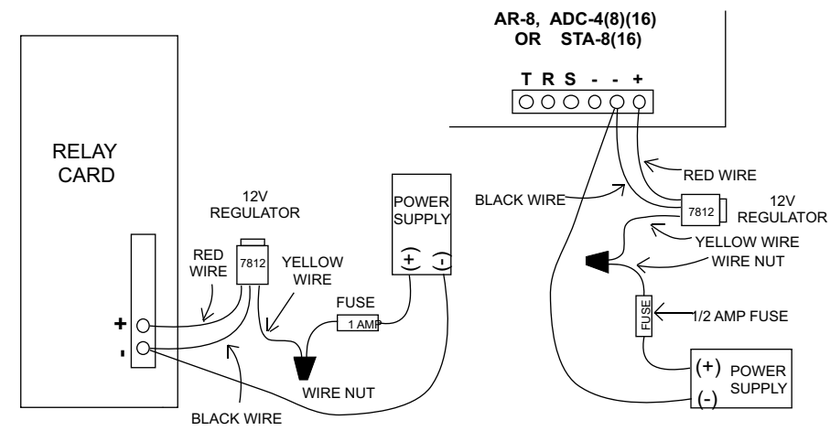

EXPANDING RELAY OUTPUT CHANNELS

The AR-8 as a stand alone unit will control 8 relays. When control of additional relays is required, EX-16

or EX-32 expansion cards may be added to control up to 120 relays with the AR-8X connected to a single COM port (or 112 relays with the ADC-16 or STA-16). Each additional EX-16 or EX-32 expansion card will provide control for 16 or 32 additional relays. A total of (7) EX-16 or (3) EX-32 expansion cards may be connected to the AR-8X, AR-16, ADC-4/8/16 or STA-8/16. The first EX-16 or EX-32 expansion card is connected to the relay expansion port on the AR-8X, ADC-16 or STA-16 using the RC-20 ribbon cable. Additional EX-16 or EX-32 expansion cards connect to the preceding EX-16 or EX-32 with the RC-20 ribbon cable. The relay output ports on the EX-16 are identical to those on the EX-32 and accept the same relay cards. Shunts on the EX-16 or EX-32 are used to select the relay output port.

For applications requiring more than 128 relay control channels, the PS-4 or PS-8 port selector may be used as a bank selector to select one bank of 128 relays. In this manner, up to 16,384 relays may be controlled (128 banks times 128 relays). An example of this method is shown below using four banks to control 512 relays.

RS-422 INTERFACING AND RS-232 DISTANCE LIMITATIONS

The RS-232 interface will allow the AR-8, AR-16, ADC-16 or STA-16 interface cards to be located up to 50 feet from the computer using a single 2 or 3 conductor wire. When distances need to be greater, the RS-422/RS-423 and the RS-422A/RS-485 interfaces will allow the Interface card to be located up to 4,000 feet from the computer using a 1 or 2 paired communications cable (2 or 4 conductor/1 or 2 twisted pairs of wire). The PS-4 or PS-8 port selector may be used to select one port (1 of 4 or 1 of 8) to control up to 8 interface cards (ADC-16, STA-16 or AR-16) at various locations up to 4,000 feet from the port selector, providing up to 256 analog inputs, up to 1,152 status inputs and providing control of up to 1,024 relays. A total of up to (16) PS-8 port selectors may be connected to a single RS-232 port, allowing for a total of 4,096 analog inputs, 18,432 status inputs and 16,384 relays.

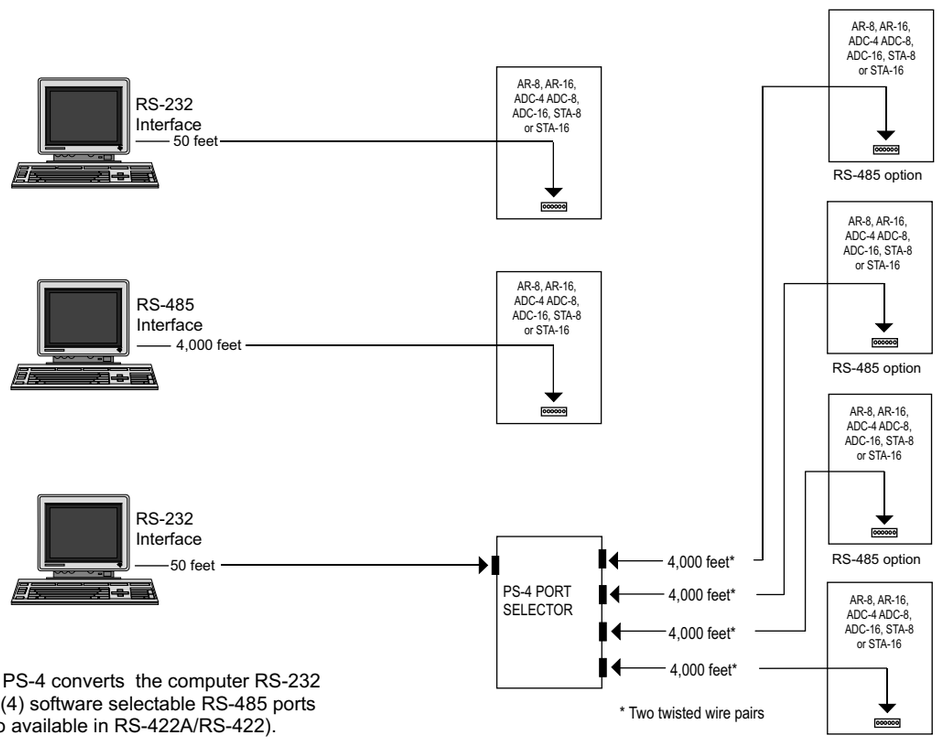

The PS-4 converts the computer RS-232 into (4) software selectable RS-485 ports (also available in RS-422A/RS-422).

CONNECTION OF MULTIPLE AR-8X INTERFACE CARDS ON A SINGLE TRANSMISSION LINE

Up to (16) AR-8X relay interface cards may be connected to a single twisted pair transmission line when using RS-485. The various AR-8X cards may be located on the same transmission line up to 4,000 feet from the PC or modem. The AR-8X will be configured for control codes 0 through 255 and for the RS-422 or RS-485 options. Please specify multi-drop control codes for the AR-8X when you place your order. Please contact technical support for more information.

MOUNTING

The interface card (AR-8X, AR-16, ADC-16 or STA-16) should be installed on top with the expansion cards (EX-16, ST-32 or AD-16) installed below. All ribbon connectors should be plugged in with the keyed notch up. The use of an extended length RC-20 ribbon cable will be necessary when the AD-16, AD-32 or ST-32 expansion cards are used with the EX-16 expansion cards (add one inch for each AD-32 or ST-32 card).

USE OF MOUNTING PANELS... The AR-8X may be mounted in an enclosure or on a metal mounting panel using the MT-1 stand-off mounting hardware. The AR-8X will attach to the 4 stand-off spacers using 4-40 machine screws (4 mounting holes are provided on the AR-8X). The AR-8X with an expansion card attached may be mounted in an enclosure or on a metal mounting panel using the MT-2 stand-off mounting hardware. The AR-8X/EX-16 (or other combination) will attach to the 4 stand-off spacers using 4-40 machine screws as shown below (4 mounting holes are provided on the AR-8X & EX-16). Contact technical support for more information on mounting panels and custom made distribution boards for use with the AR-8, AR-16, ADC-16, STA-16, EX-16, EX-32, AD-32 and ST-32 cards.

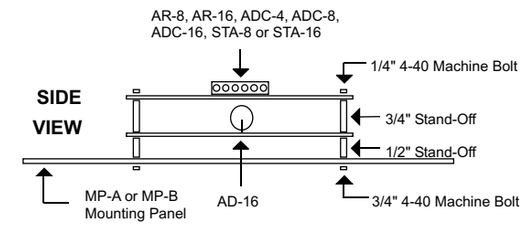

CONTROL SOFTWARE

Development of control software is a relatively simple task. To energize or de-energize a relay, a single byte code (0 thru 255 decimal or 00000000 thru 11111111 binary) is transmitted from the RS-232 port. The formula below is used to control additional relays up to relay #128 (including those in the chart). Transmitting a (255) will energize relay #128. EXAMPLE: 255 = (128 x 2) - 1 Use this formula in your software to compute relay code as a function of relay number and status.

RELAY CODE = (RELAY # times 2) - 1 ...To energize relay
RELAY CODE = (RELAY # times 2) - 2 ...To de-energize relay

ODD CODES WILL ENERGIZE RELAYS EVEN CODES WILL DE-ENERGIZE RELAYS

RELAY CODE	FUNCTION	RELAY CODE	FUNCTION
0	De-energize relay #1	8	De-energize relay #5
1	Energize relay #1	9	Energize relay #5
2	De-energize relay #2	10	De-energize relay #6
3	Energize relay #2	11	Energize relay #6
4	De-energize relay #3	12	De-energize relay #7
5	Energize relay #3	13	Energize relay #7
6	De-energize relay #4	14	De-energize relay #8
7	Energize relay #4	15	Energize relay #8

The following shows software examples in **VISUAL BASIC and C# .Net.** All program examples are provided on your installation CD along with additional source code examples in other programming languages. The programs are intended to demonstrate the fundamentals needed for development of your own software. The program examples may be copied to your program and used as a subroutine if desired.

PROGRAMING EXAMPLE IN VISUAL BASIC

```
Public Class Form1
   Dim XOut As String = "0"

   Private Sub Form1_Load(ByVal sender As System.Object, ByVal e As System.EventArgs) Handles MyBase.Load

      SerialPort1.PortName = "COM1"
      SerialPort1.BaudRate = "9600"
      SerialPort1.Encoding = System.Text.Encoding.GetEncoding(1252)
      SerialPort1.Open()

   End Sub

   Private Sub Button1_Click(ByVal sender As System.Object, ByVal e As System.EventArgs) Handles Button1.Click

      XOut = Chr(1)                    'relay code
      SerialPort1.Write(XOut)          'energize relay 1

   End Sub

   Private Sub Button2_Click(ByVal sender As System.Object, ByVal e As System.EventArgs) Handles Button2.Click
      XOut = Chr(0)                     ' set to relay code0
      SerialPort1.Write(XOut)           'de-energize relay 1
   End Sub

   Private Sub Button3_Click(ByVal sender As System.Object, ByVal e As System.EventArgs) Handles Button3.Click
      SerialPort1.Close()
      End
   End Sub

   Private Sub Button4_Click(ByVal sender As System.Object, ByVal e As System.EventArgs) Handles Button4.Click
      For X = 1 To 31 Step 2
         XOut = Chr(X)                  'relay code= X
         SerialPort1.Write(XOut)        'energize relays
      Next X
   End Sub

    Private Sub Form1_FormClosed(ByVal sender As Object, ByVal e As
System.Windows.Forms.FormClosedEventArgs) Handles Me.FormClosed
      SerialPort1.Close()
   End Sub

   Private Sub Button5_Click(ByVal sender As System.Object, ByVal e As System.EventArgs) Handles Button5.Click
      For X = 0 To 30 Step 2
         XOut = Chr(X)                  'relay code
         SerialPort1.Write(XOut)        'de-energize relays
      Next X
   End Sub

End Class
```


PROGRAMING EXAMPLE IN C#

```
using System;
using System.Collections.Generic;
using System.ComponentModel;
using System.Data;
using System.Drawing;
using System.Linq;
using System.Text;
using System.Threading.Tasks;
using System.Windows.Forms;

namespace WindowsFormsApplication1
{
   public partial class Form1 : Form
   {
      Byte[] relayByte = { 0, 0 };     //create byte array
            public Form1()
      {
         InitializeComponent();
      }

      private void Form1_Load(object sender, EventArgs e)
      {
         serialPort1.PortName = "Com1";
         serialPort1.BaudRate = 9600;
         serialPort1.Open();
      }

      private void button1_Click(object sender, EventArgs e)
      {
         relayByte[0] = 1;     //relay 1 energize code
         serialPort1.Write(relayByte,0,1);
      }

      private void button2_Click(object sender, EventArgs e)
      {
         relayByte[0] = 0;    //relay 1 de-energize code
         serialPort1.Write(relayByte, 0, 1);
      }

      private void button3_Click(object sender, EventArgs e)
      {
        for (int i = 1; i < 16; i+=2)
         {
            relayByte[0] = (byte)i;
            serialPort1.Write(relayByte, 0, 1);
         }
      }

      private void button4_Click(object sender, EventArgs e)
      {
         for (int i = 0; i < 15; i += 2)
         {
            relayByte[0] = (byte)i;
            serialPort1.Write(relayByte, 0, 1);
         }
      }
   }
}
```

Follow these steps to use the VB or C# examples

(1) Start Visual Studio and on the File pull down menu, select New Project. Select VB or C# and select Windows Form Application and click OK.

(2) From the toolbox, drag 1 SerialPort control to the new form (Form1)

(3) Drag 5 buttons to Form1 (do this before you paste the example code)

(4) After you have completed all the above, double click on Form1 to generate your form load sub. Go back to form design and double click on each button to generate all the button click subs.

(5) Now copy (from the CD copy of these examples) all the code shown in each sub and paste to the same sub in your new code window. Note: if word wrap occurs with your text editor, correct before you select the example.

(6) Copy and paste the Dim or Byte array lines.

Two buttons will control a relay and the third will exit the program

The last 2 buttons will energize or de-energize all of the 8 first relays.

Be sure to close your com port when the program stops (see FormClosed)

This method works in all versions of Visual Studio including Visual Studio Express.

Shown are several examples for use with the Microsoft .Net Framework. The installation CD will have examples in all the programming languages used with Microsoft Visual Studio including Visual Basic, Visual C#, Visual C++ and ASP .Net. Additional source code examples are available in several other variations which may be more suitable for alternate programming languages (including interfacing to older DOS programs if needed).

Please contact EECI technical support for more information.

SYSTEMS LEVEL BAUD RATE SELECTION

The baud rate for IBM & compatibles may be selected by turning on the baud rate latch (bit 7 of the line control register) and setting the registers as shown to the right. Basic programmers may use the OPEN COM command to set the baud rate for COM 1 & 2 in place of this method. The baud rate and protocol for COM 3 & 4 should be selected from Basic by using the above procedure and the OUT command. An example is provided on the test disk using COM 3 & 4 from Basic.

Baud Rate	MSB	LSB (decimal)
300	1	128
600	0	192
1200	0	96
9600	0	12
19200	0	6

Other standard baud rates may be selected by adjusting the given values. EXAMPLE: 4800 baud = 1/2 of 9600 = 24

The Com port register locations for COM 1 thru COM 4 are shown on page 13.

RELAY INTERFACING

In the event that you wish to use existing control relays with the AR-16 or EX-16, you may use the RYD-8 relay driver card or construct a relay driver circuit as shown below. We recommend the use of opto-isolators to protect the AR-16 from possible damage which could occur as a result of voltage incompatibility. The voltage and current output of the relay output ports are too low for most relays (with the exception of some types of solid state relays). We recommend the use of the following circuit to drive most types of mechanical and reed relays with 12 volt DC coils (200 MA maximum).

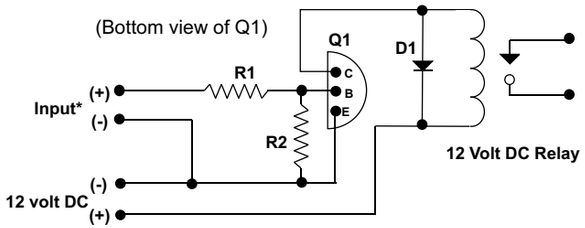

*connect to TTL level output from the AR-16 using the RCT-8 (- is common)

PARTS LIST

(Q1) NPN Transistor...MPS6560 or (Radio Shack 276-2009)
(D1) Diode.....1N4148 or (Radio Shack 276-1122)
(R1, R2) Resistor.....3K, 33K (Radio Shack 271-1328, 1341)
(Relay) Radio Shack 275-214, 275-206, 275-233 or equivalent

NOTE: When using opto-couplers, connect terminal #9 on the RCT-8 to the (+) 12 volt supply.

RELAY PORT HEADER CONNECTOR PIN-OUT

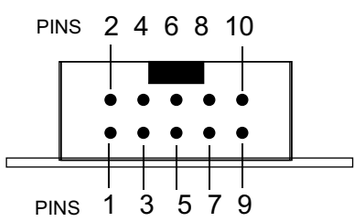

HEADER PIN-OUT FOR AR-16, EX-16 & EX-32.

NOTE: Key notch is on top. View is looking into header pins.

PIN CONNECTIONS

(1) Relay #1
(2) Relay #2
(3) Relay #3
(4) Relay #4
(5) Relay #5
(6) Relay #6
(7) Relay #7
(8) Relay #8
(9) Opto (+) (used only with opto isolators)
(10) Signal Ground

CONNECTION DIAGRAMS FOR RELAY CARDS AND RCT-8

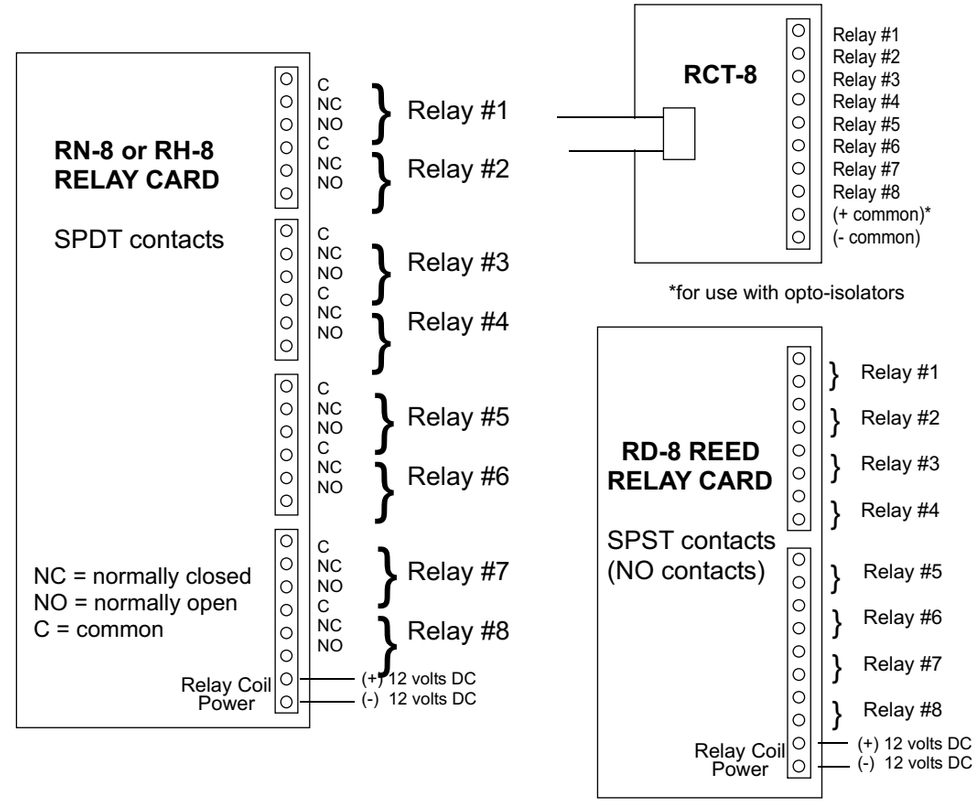

NOTE 9: Connect the Relay Card or RTC-8 ribbon cable to the AR-16 with the ribbon cable pointing up and with the red conductor on top (see diagrams on pages 2 & 11).

SPECIFICATIONS RH-8 RELAY CARD

Size	2.75" by 6"
Weight	8 ounces
Number of Relays	8
Contact rating (AC)	10 amp 250 VAC
Contact rating (tungston)	3 amp 360 watt
Contact rating (DC)	10 amp 24 VDC
Contact rating (horsepower)	1/3 HP 240 VAC
Contacts	SPDT
Power requirements	12 volts DC 500ma
Terminal block rating	125 volts
Optional heavy duty block	250 volts

SPECIFICATIONS RD-8 REED RELAY CARD

Size	2.25" by 4.875"
Weight	3.5 ounces
Number of relays	8
Contact rating (DC)	10 VA 200 VDC
Contact rating (AC)	10 VA 200 V peak
Max switching current	1/2 amp
Contacts	SPST
Power requirements	12 Volts DC 200ma
Terminal block rating	125 volts
Optional heavy duty block	200 volts

CONNECTION OF THE RYD-8 TO THE AR-16 OR EX-16

SPECIFICATIONS RYD-8 RELAY DRIVER CARD

Size..... 2.25" by 4.875"
Weight..... 2.5 ounces
Relay Outputs..... 8
Maximum current rating..... 3 amp (requires heat sinks above 1.5 amps)
Input voltage range..... 5 to 48 volts DC (voltage must match relay coil requirement)

DESCRIPTION: The RYD-8 relay driver card provides (8) relay drivers for connection directly to relay coils, contactor coils or other devices (such as motors, lamps, solenoids, etc.). The ribbon cable provided with the RYD-8 will connect directly to a relay output port on the AR-16 Relay Interface or the EX-16 Relay Expansion Card to allow the RYD-8 relay driver to provide software control of the relay or device to be connected to the terminal block on the RYD-8. The RYD-8 relay driver card will power relays or other devices which require 3 amps or less and operate within the voltage range of 5 to 30 volts DC. The output voltage of the RYD-8 (for powering the relay coil or device) is equal to the RYD-8 power input which is applied to terminals (11) and (12) on the RYD-8 terminal block. All eight relay coils (or other devices which are connected to the RYD-8) must operate at the same voltage and must operate at the voltage that is applied to terminals (11) and (12) on the RYD-8 terminal block.

RYD-8 CONNECTION DIAGRAM

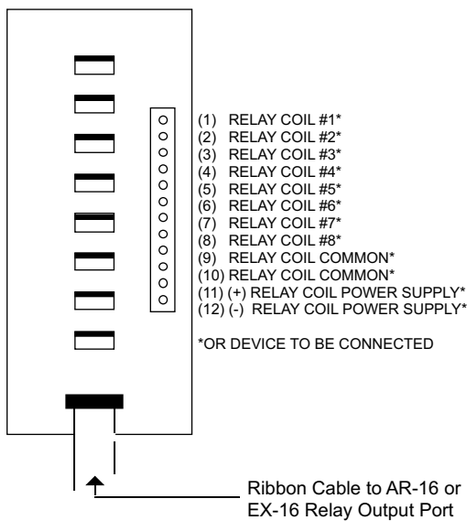

One side of the relay coil of each relay must be connected to one of the relay common terminals (two terminals are provided for all eight relays, terminal #9 and terminal #10).

ALL EIGHT RELAY COILS (or connected device) MUST OPERATE AT THE SAME VOLTAGE.

NOTE 10: When opto-isolators are installed on the AR-16 relay interface or EX-16 relay expansion card, a seperate isolated power supply should be used for the power input to the RYD-8 to power the relay coils or other devices. Failure to use an isolated power supply will defeat the purpose of the opto-isolators.

HEAT SINKS: Heat sinks should be installed on the power transistors on the RYD-8 relay driver card if the relay coil or the device to be connected requires more than 1.5 amps continuous. A heat sink kit is available for this purpose (specify RYD-8 heat sink kit). Please contact technical support for additional information.

Relays or devices connected to the RYD-8 may be located up to several miles from the RYD-8 if opto-isolators are installed on the AR-16 or EX-16. The only limiting factor is the voltage drop in the relay interconnect wire. A number of different types of relays with various contact configurations are available for connection to the RYD-8. Contact technical support for more information.

The ribbon cable on the RYD-8 may be connected to any of the relay output ports on the AR-16 or EX-16 (in the same manner as the relay cards are connected). The ribbon cable should be connected with the red line on the ribbon cable closest to top of the AR-16 or EX-16 (refer tio illustration on page 2 showing connection of relay card ribbon cable).

REMOTE CONNECTION OF RELAY CARDS OR RELAY DRIVER CARDS

The following illustration shows how relay cards or relay driver cards may be connected to the AR-16. The relay card or relay driver card must be ordered with a ribbon cable header in place of the standard edge connector.

NOTE 11: Opto-isolators must be installed on the AR-16 or EX-16 to protect sensitive CMOS devices on the cards when remotely connecting relay cards or other devices.

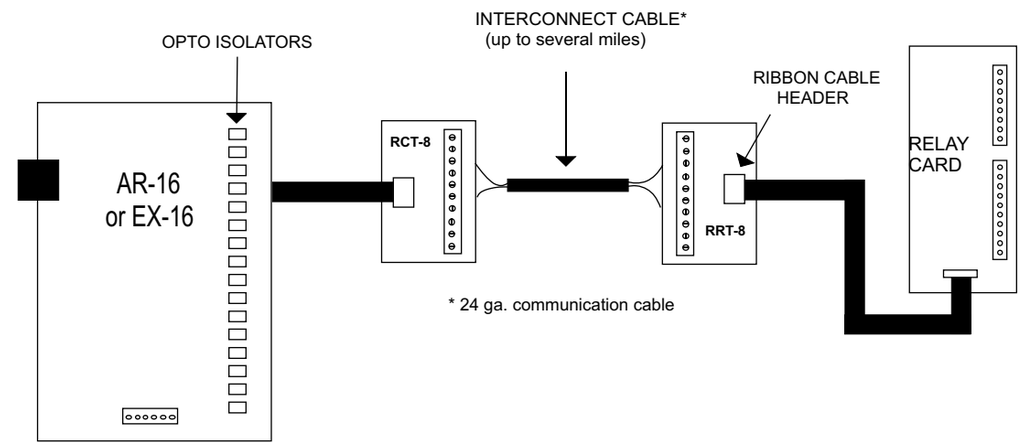

REPAIR SERVICE FOR THE AR-8

In the event that the AR-8 is damaged from an inadvertent short circuit or other mishap, repair service is available through us by shipping your AR-8 to the address on the rear cover of this manual. The charge for minor repair is $15.00 and takes about 3 business days (not including shipping).

ELECTRONIC ENERGY CONTROL, INC.
14960 Maple Ridge Rd
Milford Center OH 43045-9016
USA

PHONE*..... (937) 349-6000
FAX*..... (614) 464-9656
ORDERS..... (800) 842-7714
TECH SUPPORT... (937) 349-6000
E-mail*..... sales@eeci.com
web*..... http://www.eeci.com
*International & Domestic

Copyright © 2014 - 2017 Electronic Energy Control, Inc. All Rights Reserved